Pierlite Australia
Phone: 1300 799 300
pierlite.com.au

Pierlite New Zealand
Phone: 0508 743 754
pierlite.co.nz

INSTALLATION / WARRANTY INSTRUCTIONS
PRODUCT BRAND: PIERLITE
PRODUCT NAME: SLENDER ACADEMY GEN2
PRODUCT CODE: SLA06349K19D1G2, SLA06649K19D2G2, SLA12349K19D2G2, SLA12649K19D3G2

Issue Date: January 6th , 2025

Please read these installation instructions carefully before installing or maintaining this equipment. The product is designed for installation and maintenance in accordance with relevant Australian standards (AS/NZ3000), by an authorised and licensed electrician. The installation instructions were correct at the time of print. To reflect changes in technology and Australian and New Zealand standards; Pierlite reserves the right to amend the instructions without notice. Updated guidelines can be found on relevant brand web site.

SLA06349K19D1G2 **SLA06649K19D2G2** **SLA12349K19D2G2** **SLA12649K19D3G2**

MUST BE INSTALLED BY A LICENSED ELECTRICIAN

1. PRODUCT SPECIFICATION:

Product code	SLA06349K19D1G2	SLA06649K19D2G2	SLA12349K19D2G2	SLA12649K19D3G2
Material and Colour	SPCC in white + PC diffuser			
Electrical classification	Class II			
Ingress protection	IP44 for panel only, IP20 for whole fitting with driver			
IK rating	IK04			
IC Rating(recessed only)	IC-4 for panel only, DO NOT COVER for LED driver			
Nominal voltage	220-240V~			
Nominal frequency	50Hz			
Available wattages	Refer to section 3			
Line current	Refer to section 3			
Power factor	Refer to section 3			
Surge protection rating	L/N: 1KV	L/N: 1KV	L/N: 1KV	L/N: 1KV
Inrush current	Refer to section 3			
Earth leakage	<0.7mA			
Operating ambient temperature	-10 - 40°c			
LED lifetime	L70B50 > 54000 hours (L90B10 > 50000hours)			
Colour temperature	4000K			
SDCM	≤3			
Colour rendering index (CRI)	≥ 90			
Lumen output	Refer to section 3			
LED control gear	DALI 2 driver with dip switches			
Electrical connection	1.2M flex and plug			
Installation Orientation	Horizontal face down – Recessed, Surface mounted, Suspended			
Dimensions (LxWxH)	Refer to section 4			
Net weight of luminaire	Refer to section 4			

Pierlite Australia
Phone: 1300 799 300
pierlite.com.au

Pierlite New Zealand
Phone: 0508 743 754
pierlite.co.nz

Applications	Interior commercial and education, etc.
Direct mounting on flammable surfaces	Yes
Cord Type (X,Y,Z)	Z
Warranty	5 years

These products are designed to be lumen selectable. Factory settings could be altered accordingly by adjusting the lumen DIP switch located on driver.

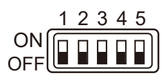

2. CONSUMABLES AND ACCESSORIES

Description	QTY Required Per Fitting	Brand	Component Part Number	Dimensions (mm)	Suitable for Pierlite Slender Academy Gen2
PLASTER MASTER RECESSED FRAMES (SOLD SEPARATELY)	1	PIERLITE	FRM/PM18W	600X300	SLA06349K19D1G2
	1	PIERLITE	FRM/PM18WIDE	600X600	SLA06649K19D2G2
	1	PIERLITE	FRM/PM36W	1200X300	SLA12349K19D2G2
	1	PIERLITE	FRM/PM36WIDE	1200X600	SLA12649K19D3G2
UNIVERSAL DEEP FRAME FOR AUSTRALIA (SOLD SEPARATELY)	1	PIERLITE	UDFRM/6-3	600X300X70	SLA06349K19D1G2
	1	PIERLITE	UDFRM/6-6	600X600X70	SLA06649K19D2G2
	1	PIERLITE	UDFRM/12-3	1200X300X70	SLA12349K19D2G2
	1	PIERLITE	UDFRM/12-6	1200X600X70	SLA12649K19D3G2
SURFACE MOUNTED FRAME UNIVERSAL FOR NEW ZEALAND (SOLD SEPARATELY)	1	PIERLITE	SMFRM063	600X300	SLA06349K19D1G2
	1	PIERLITE	SMFRM066	600X600	SLA06649K19D2G2
	1	PIERLITE	SMFRM123	1200X300	SLA12349K19D2G2
	1	PIERLITE	SMFRM126	1200X600	SLA12649K19D3G2
SUSPENSION KIT- INCLUDES 2 SETS FOR 1 PANEL (SOLD SEPARATELY)	1	PIERLITE	WIRESUSP/SLA		SLA06349K19D1G2 SLA06649K19D2G2 SLA12349K19D2G2 SLA12649K19D3G2

3. LUMEN SELECT TABLE (contractor selectable output)

Pierlite's lumen select products allows all licensed electricians to purchase one luminaire that can be set as multiple fixed wattages/fixed lumen outputs. By offering this capability within one fitting, it provides the following benefits

- One fitting multiple fixed outputs
- Less stocked items
- Easy to change settings
- IES files available for all available for wattages shown in the above table
- No control system or software required to change fixed output

The lumen output can be altered by changing the dip switches located on driver from the factory default setting to the preferred lumen output to suit various applications.

Pierlite Australia
Phone: 1300 799 300
pierlite.com.au

Pierlite New Zealand
Phone: 0508 743 754
pierlite.co.nz

Product Code	Power (W)	Line Current (A)	Power Factor	Inrush Current	CCT	Output Lumens (lm)	Drive Current (mA)	Dip-switch Settings 1	2	3	4	5	Selected Output
SLA06349K19D1G2	11	0.05	0.86	9.96A/221µs	4000K	1331	250	ON	OFF	ON	OFF	/	
	13	0.06	0.89	9.96 A /222µs		1575	300	ON	OFF	OFF	OFF	/	Default
	15	0.07	0.91	9.96 A /221µs		1811	350	OFF	ON	ON	OFF	/	
	16	0.08	0.92	9.39 A /225µs		2041	400	OFF	ON	OFF	OFF	/	
	18	0.08	0.94	9.96 A /221µs		2271	450	OFF	OFF	ON	OFF	/	
	20	0.09	0.95	10.03 A /227µs		2497	500	OFF	OFF	OFF	OFF	/	
SLA06649K19D2G2	18	0.08	0.92	12.84 A /266µs	4000K	2275	550	ON	OFF	ON	OFF	OFF	
	19	0.09	0.93	13.72 A /263µs		2466	600	ON	OFF	OFF	ON	OFF	
	21	0.10	0.94	13.56 A /265µs		2658	650	ON	OFF	OFF	OFF	OFF	
	22	0.10	0.94	12.68 A /262µs		2845	700	OFF	ON	ON	ON	OFF	Default
	24	0.11	0.95	12.71 A/265µs		3031	750	OFF	ON	ON	ON	OFF	
	25	0.11	0.95	13.78 A/262µs		3213	800	OFF	ON	OFF	ON	OFF	
	27	0.12	0.96	13.32 A/264µs		3393	850	OFF	OFF	OFF	OFF	OFF	
	28	0.13	0.96	12.6 A/264µs		3569	900	OFF	OFF	ON	ON	OFF	
	30	0.13	0.97	13.64 A/263µs		3748	950	OFF	OFF	ON	OFF	OFF	
	31	0.14	0.97	13.64 A/261µs		3927	1000	OFF	OFF	OFF	ON	OFF	
	33	0.15	0.97	13.56 A/264µs		4119	1050	OFF	OFF	OFF	OFF	OFF	
SLA12349K19D2G2	18	0.08	0.92	12.84 A/263µs	4000K	2255	550	ON	OFF	ON	OFF	OFF	
	19	0.09	0.93	13.72 A/263µs		2445	600	ON	OFF	OFF	ON	OFF	
	21	0.10	0.94	13.56 A/262µs		2638	650	ON	OFF	OFF	OFF	OFF	
	22	0.10	0.94	12.68 A/262µs		2823	700	OFF	ON	ON	ON	OFF	Default
	24	0.11	0.95	12.71 A/263µs		3044	750	OFF	ON	ON	OFF	OFF	
	25	0.12	0.95	13.78 A/265µs		3193	800	OFF	ON	OFF	ON	OFF	
	27	0.12	0.96	13.32 A/264µs		3374	850	OFF	OFF	OFF	OFF	OFF	
	29	0.13	0.96	12.6 A/264µs		3550	900	OFF	OFF	ON	ON	OFF	
	30	0.14	0.97	13.64 A/263µs		3726	950	OFF	OFF	ON	OFF	OFF	
	32	0.14	0.97	13.64 A/262µs		3906	1000	OFF	OFF	OFF	ON	OFF	
	34	0.15	0.97	13.56 A/261µs		4077	1050	OFF	OFF	OFF	OFF	OFF	
SLA12649K19D3G2	36	0.17	0.93	15.56 A/394µs	4000K	4664	1100	ON	OFF	OFF	OFF	OFF	
	38	0.17	0.94	15.64 A/392µs		4845	1150	OFF	ON	ON	ON	OFF	
	39	0.18	0.94	15.64 A/379µs		5031	1200	OFF	ON	ON	OFF	OFF	
	41	0.19	0.94	15.64 A/385µs		5211	1250	OFF	ON	OFF	ON	OFF	
	42	0.20	0.95	15.64 A/384µs		5388	1300	OFF	ON	OFF	OFF	OFF	
	44	0.20	0.95	15.64 A/392µs		5565	1350	OFF	OFF	ON	ON	OFF	
	46	0.21	0.95	15.64 A/391µs		5740	1400	OFF	OFF	ON	OFF	OFF	
	48	0.22	0.95	15.64 A/391µs		5924	1450	OFF	OFF	OFF	ON	OFF	
	49	0.22	0.96	15.64 A/3891µs		6119	1500	OFF	OFF	OFF	OFF	OFF	Default

4. LINE DIAGRAMS AND DIMENSION

Item code	Length (mm)	Width (mm)	Height (mm)	Weight in (kg)
SLA06349K19D1G2	593.5	293.5	32	1.27
SLA06649K19D2G2	593.5	593.5	32	2.18
SLA12349K19D2G2	1193.5	293.5	34	2.18
SLA12649K19D3G2	1193.5	593.5	36	4.55

Pierlite Australia
Phone: 1300 799 300
pierlite.com.au

Pierlite New Zealand
Phone: 0508 743 754
pierlite.co.nz

SLA06349K19D1G2 - 293.5mm*593.5mm*32mm

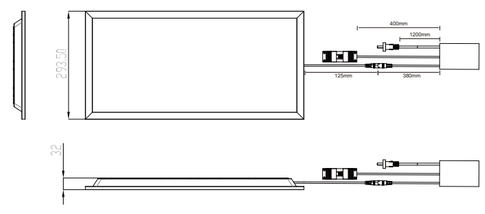

SLA06649K19D2G2 - 593.5mm*593.5mm*32mm

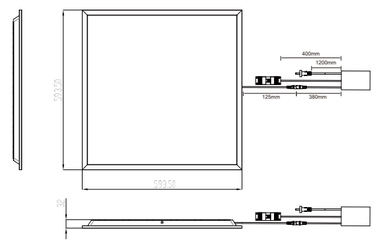

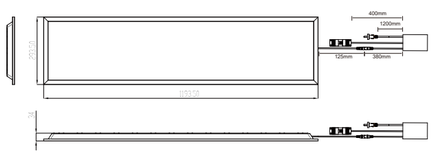

Pierlite Australia
Phone: 1300 799 300
pierlite.com.au

Pierlite New Zealand
Phone: 0508 743 754
pierlite.co.nz

SLA12649K19D3G2 - 593.5mm*1193.5mm*36mm

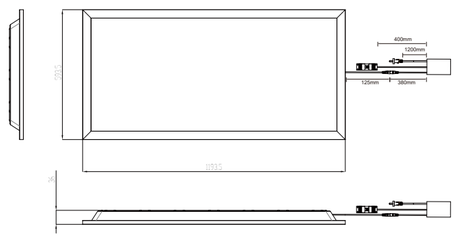

5. INSTALLATION / GENERAL: Installation of the product is to be completed by an authorized and licensed electrician, in accordance with these instructions, relevant Australia standards and local regulations (where applicable). Termination of product wiring, together with the installation of the product must be in a manner and orientation that maintains the integrity of the designated IP rating of the product for electronic control equipment (when supplied) DO NOT MEGGER between A and N.

This Luminaire can be abutted and covered by insulation.

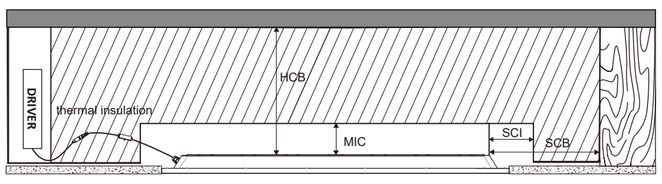

Note:
For IC-4 installation, DO NOT use double sided tape on the driver and attach it to back of the panel,
For IC-4 installation, place LED driver in ventilated area,
IC-4 for panel only, DO NOT COVER for LED driver

HCB(Height clearance to building element) HCB = 0mm
Minimum distance between the top of the recessed luminaire and the combustible building element above it.
MIC(Minimum insulation clearance) MIC = 0mm
Minimum distance between the top of the recessed luminaire and the building insulation above it.
SCB(Side clearance to building element) SCB = 0mm
Minimum distance between the side of the recessed luminaire and the combustible building element next to it.
SCI(Side clearance to insulation) SCI = 0mm
Minimum distance between the side of the recessed luminaire and the building insulation next to it.

WARNING — RISK OF OVERHEATING OR FIRE IF THE CLEARANCE DISTANCES ARE COMPROMISED.

Installation Instructions:
1） **Surface mounted**
I) UNIVERSAL DEEP SURFACE MOUNT FRAME (Product code: UDFRM/12-3, UDFRM/12-6, UDFRM/6-3, UDFRM/6-6 to be purchased separately)

Pierlite Australia
Phone: 1300 799 300
pierlite.com.au

Pierlite New Zealand
Phone: 0508 743 754
pierlite.co.nz

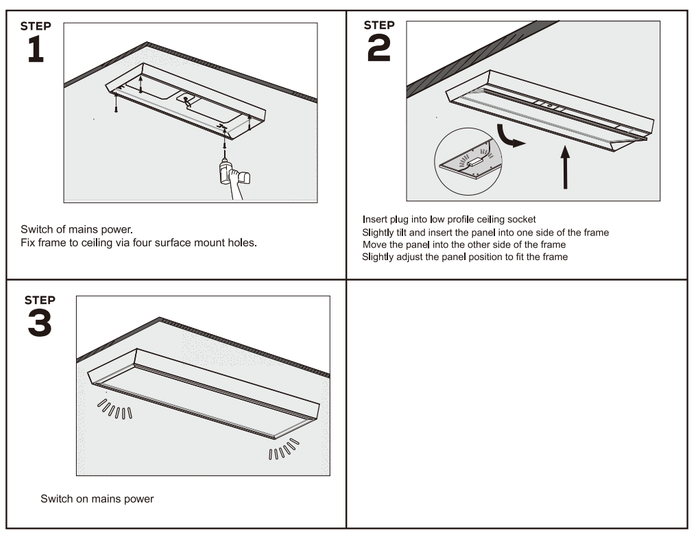

II) SURFACE MOUNTED FRAME UNIVERSAL FOR NEW ZEALAND (Product code: SMFRM063, SMFRM066, SMFRM123, SMFRM126 to be purchased separately)

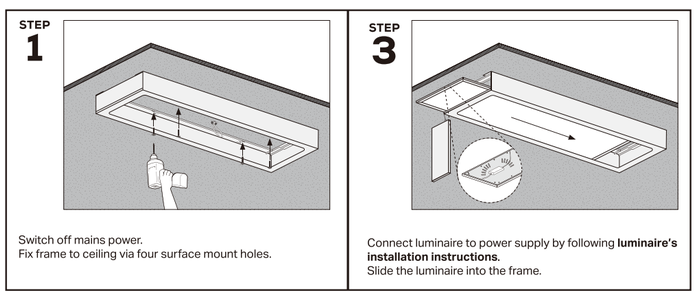

Pierlite Australia
Phone: 1300 799 300
pierlite.com.au

Pierlite New Zealand
Phone: 0508 743 754
pierlite.co.nz

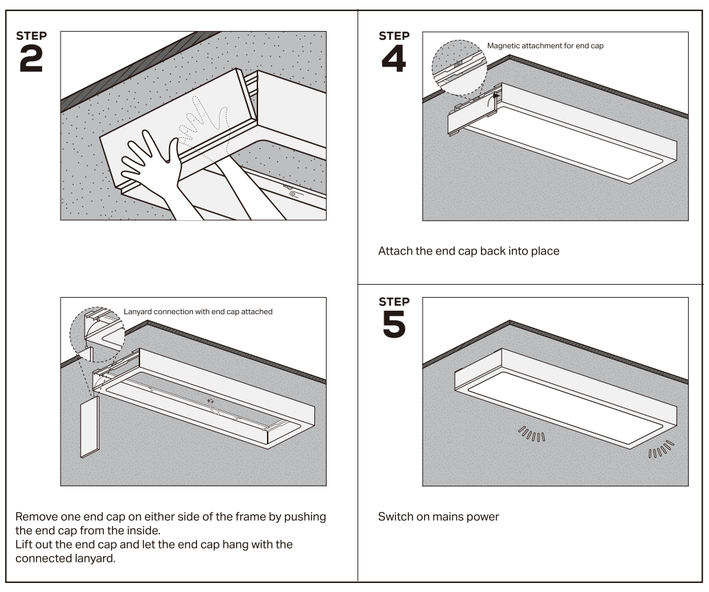

Pierlite Australia
Phone: 1300 799 300
pierlite.com.au

Pierlite New Zealand
Phone: 0508 743 754
pierlite.co.nz

2) **RECESSED INSTALLATIONS**
I) Usual installations

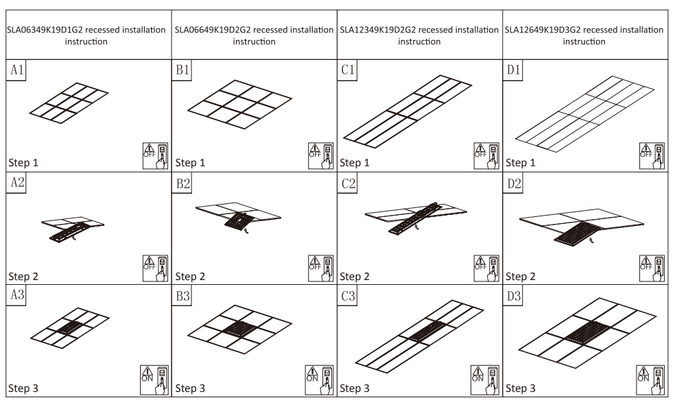

II) PLASET MASTER FRAME(Product code:FRM/PM 18W, FRM/PM18WIDE,FRM/PM36/PM36WIDE to be purchased separately)

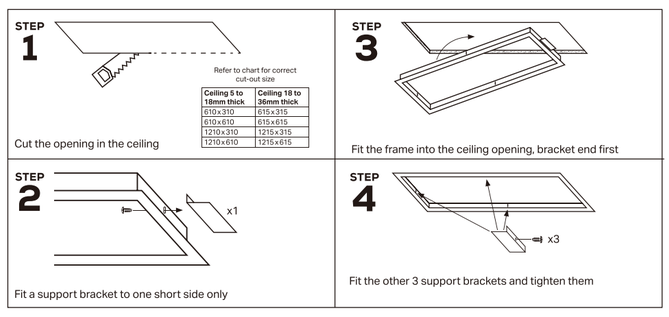

Pierlite Australia
Phone: 1300 799 300
pierlite.com.au

Pierlite New Zealand
Phone: 0508 743 754
pierlite.co.nz

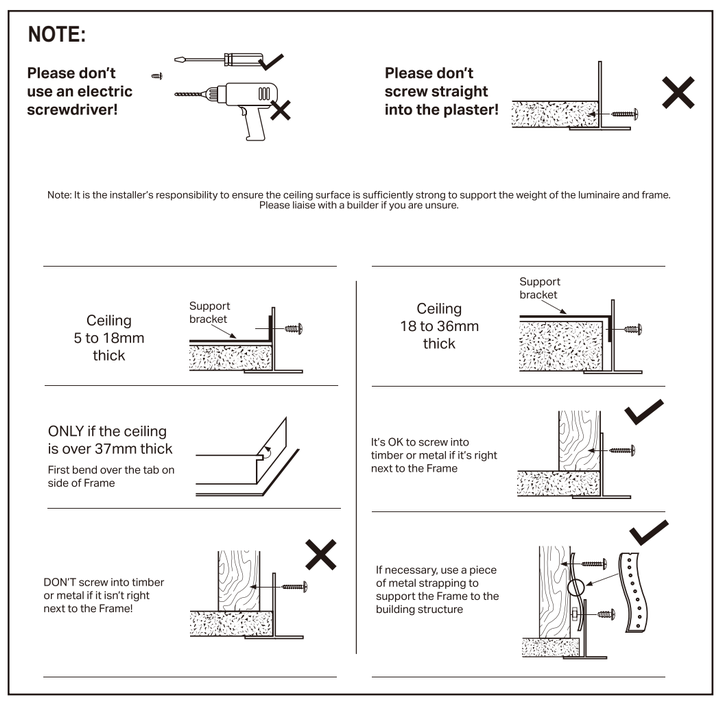

Pierlite Australia
Phone: 1300 799 300
pierlite.com.au

Pierlite New Zealand
Phone: 0508 743 754
pierlite.co.nz

3) **SUSPENSION INSTALLATIONS**

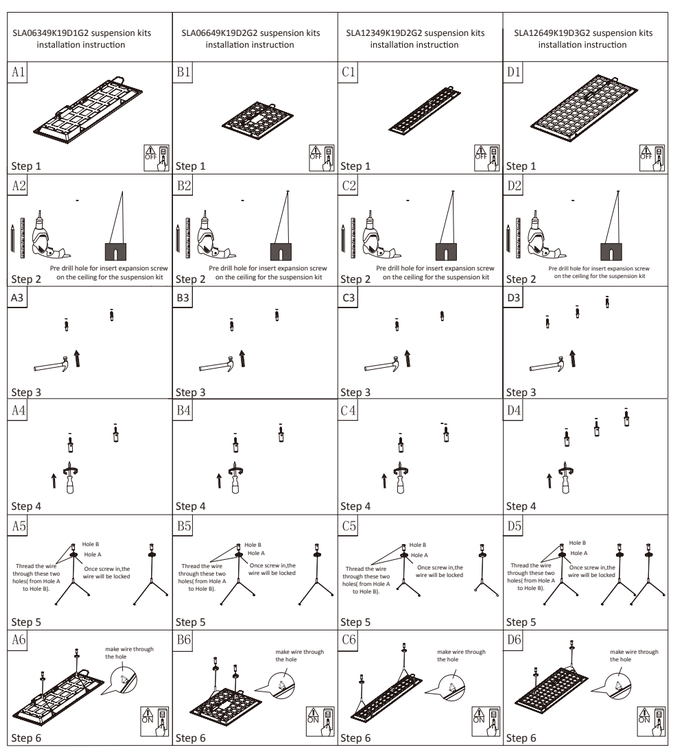

WARNING: The light source contained in this luminaire shall only be replaced by the manufacturer or his service agent or a similar qualified person.

6. IMPORTANT - the product must be maintained and operated in accordance with the manufacturer's instructions, failure to do so may damage the product and services. It is strongly recommended that this important note be communicated to the owner and or operator of the installation at the time of site commissioning. Good practice does not recommend the 24/7 use of products without the application of suitable switch cycle intervals. Furthermore, with the omission of nominated survival curves and or

Pierlite Australia
Phone: 1300 799 300
pierlite.com.au

Pierlite New Zealand
Phone: 0508 743 754
pierlite.co.nz

recommended operating hours, product design expectations provide for a continual daily usage of 6 hours for residential applications and a continual daily usage of 12 hours for commercial and industrial applications. All products must be thoroughly cleaned on a regular basis at intervals that reflect in the installation environment, ensuring the optical performance, together with the electrical, mechanical, and structural integrity as designed, is maintained throughout the service life of the product.

7. APPROVALS: The RCM marking of this product applies to AS/NZS CISPR15 (EMC) "Limits and methods of measurement of radio disturbance characteristics of electrical lighting and similar equipment".
This product is designed to conform to AS/NZS60598 "Luminaires, general requirements and tests".

STORAGE: Prior to installation products are to be stored in cool and dry conditions.

8. APPLICATION: The installation application and orientation of the product is designed in accordance with the nominated product IP rating, class designation and these installation installations. Installation environments outside these conditions are not recommended.

9. MAINTENANCE:
(a) The supply must be isolated before opening or accessing the luminaire. Product maintenance is IMPORTANT and is critical to the products designed performance. The product is to be maintained in accordance with the manufacturer's instructions. For the latest product maintenance guides please go to relevant brand web site. Pierlite is not responsible for any product not maintained in accordance with the recommended procedure or intervals.
(b) Lamps (where provided): The product is designed with the supplied (LEDs) / LAMP/s and it is strongly recommended that any LAMP / (LEDs) changes (if any) be made in accordance with the type, colour and brand supplied. For recommended LAMP / LED maintenance or operating guides (inclusive of recommended product switch cycles and mandatory run-in procedures for HID and Fluorescent lamps when used with dimming circuits), Pierlite recommends the application of the lamp manufacturer's operating guidelines, which can be found on manufacturer's website. Pierlite is not responsible for the product performance of alternative lamp/s used. As a member of FluroCycle, we encourage recycling of lamps and components.
(c) Battery (where provided): The battery is designed with a rated average battery design life in standby mode, and is supported with a standard warranty (refer to product specifications for details); conditional of the product being maintained and operated in accordance with the manufacturer's guidelines and tested in accordance with AS/NZS2293. For guidelines see product installation instructions or visit the relevant brand web site.
(d) For products supplied with glass visors or covers, do not operate the product with a damaged visor or cover; it is recommended the product be turned off, area surrounding the product vacated, and the damaged glass replaced by a professional installer immediately.
(e) Cables or cords (where provided): If any external cable or cord of the X or Y type luminaire is damaged, it shall be replaced by a qualified person or manufacturers service agent.
For Z type attachments to luminaire, cord cannot be replaced if damaged, the luminaire shall be removed from service.

Flex cord types

- X: Specially prepared flexible cable or cord, may also include a part of the luminaire and only available from manufacturer.
- Y: Attachment may be used with either an ordinary or special flexible cable/cord.
- Z: Attachment of cable/cord that cannot be replaced without damage to luminaire

10. WARRANTY INSTRUCTIONS: For purpose of warranty claims (if any) the following instructions apply:
Warranty period - The above components are provided with a warranty (refer to product specifications for details) against manufacturing defects or failure to perform to specifications for products installed by an authorised installer in accordance with the manufacturer's installation instructions and which have not been subject to incorrect operation or maintenance, unauthorised modification or damage arising from any intervening cause.
Warranty reference - The warranty reference date commences from the date of purchase.
Warranty point of contact – Pierlite, 96 Gow Street Padstow NSW 2211, phone T 1300 799 300 – Pierlite After Sales Support.
Warranty claim procedure – For the purpose of making a claim the customer must:
1. Contact the "point of contact" above and upon provision of proof of purchase the customer will receive a goods return advice (GRA) number. 2. At the customer's expense, collect and return the goods to the "point of contact" with the issued GRA number. 3. Upon receipt of the goods, Pierlite will review the claim and if found to be accepted, Pierlite will return a replacement product to the customer to install at the customer's expense. Alternatively, if the claim is rejected, the customer may request the return of the goods at their expense.
Consumer Contracts - The benefits to the customer given by the Pierlite warranty are in addition to other rights and remedies of the customer if the goods are the subject of a Consumer Contract under the Australian Consumer Law. In that event the following statement is required to be brought to the Consumer's attention: - *Our goods come with guarantees that cannot be excluded under*

Pierlite Australia
Phone: 1300 799 300
pierlite.com.au

Pierlite New Zealand
Phone: 0508 743 754
pierlite.co.nz

the Australian Consumer Law. You are entitled to a replacement or refund for a major failure and for compensation for any other reasonably foreseeable loss or damage. You are also entitled to have the goods repaired or replaced if the goods fail to be of acceptable quality and the failure does not amount to a major failure.
Limitation of Liability – if the goods are not purchased by the customer under a Consumer Contract within the Australian Consumer Law then but not otherwise;- (a) the Company is not liable in tort for any loss or damage suffered by the customer or by any third party; and (b) in no circumstances is Pierlite liable to the customer or to any third party for any loss of profits, loss of anticipated savings, economic loss or interruption of business or for any indirect or consequential loss (Consequential Loss).
Terms of Sale – these warranty provisions are in substitution for any inconsistent provisions in the Pierlite Terms and Conditions of Sale in so far as they apply to the warranty components.